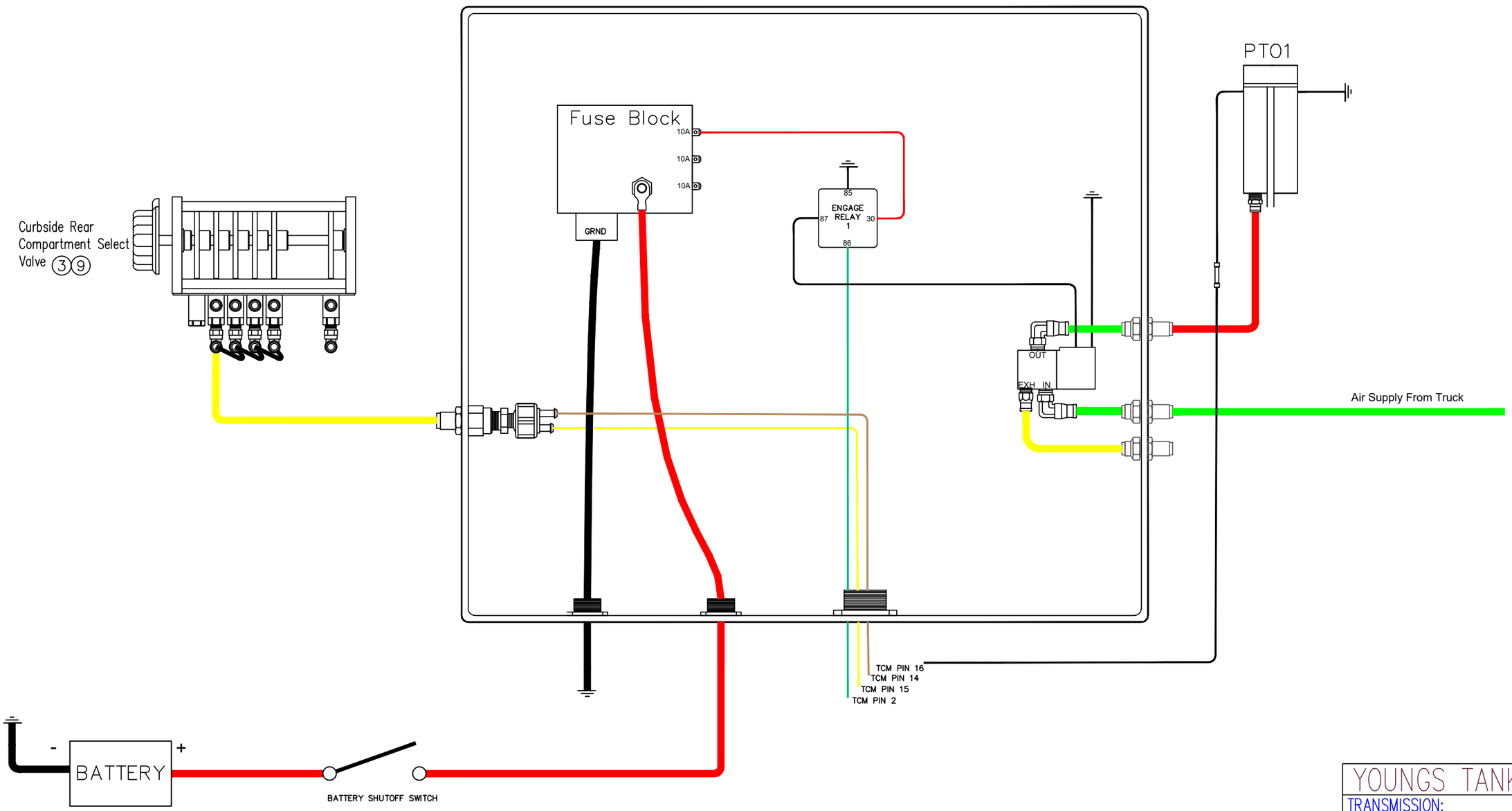


REV C

YOUNGS TANK, INC.

TRANSMISSION:

ENDURANT SINGLE PTO WIRING

SIZE | DOT: | DWG NO. | REV

SCALE 1" = | SEE SEPARATE REVISION HISTORY | SHEET

Work Order:

10/1/2024